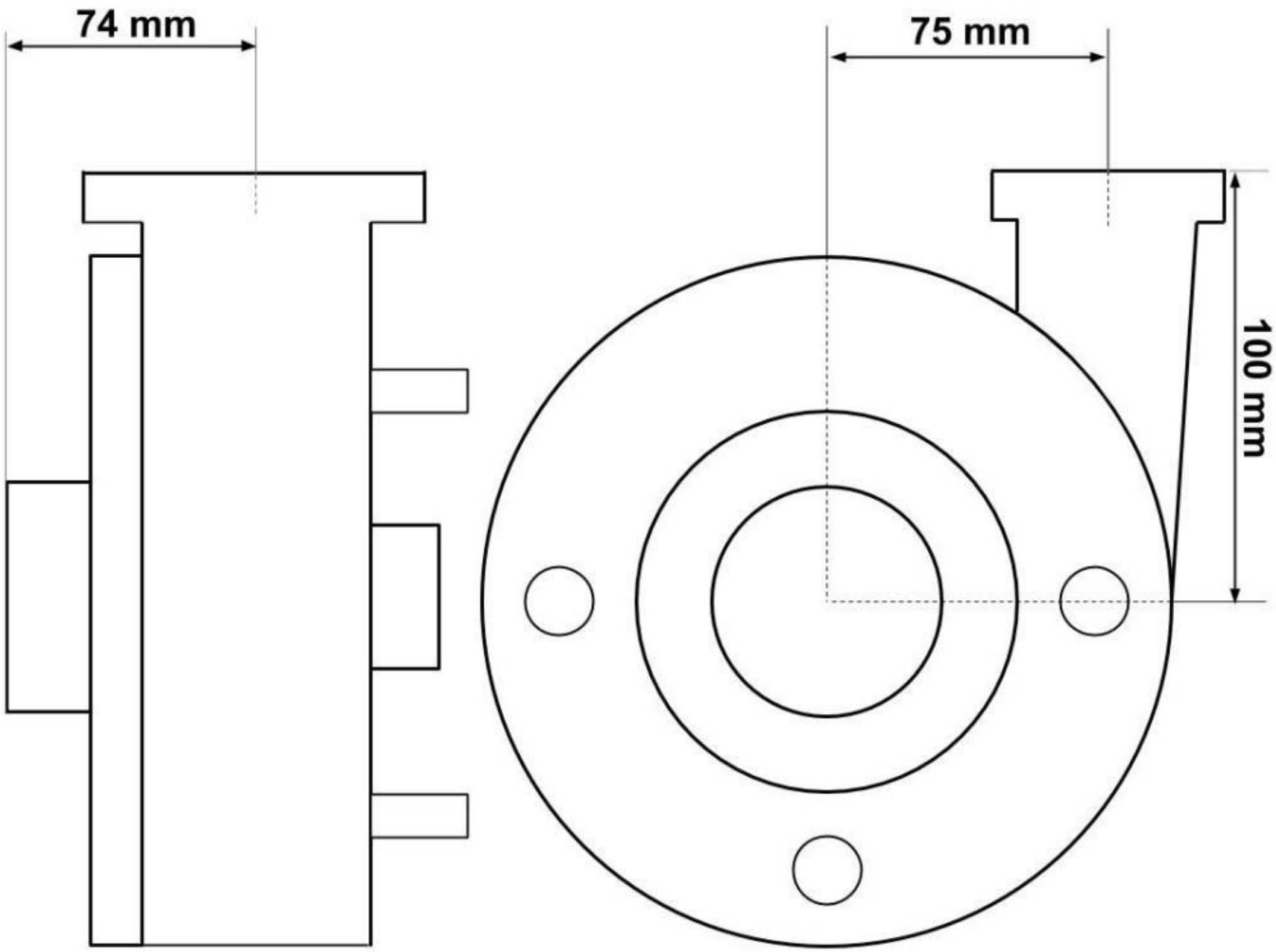
74 mm
75 mm
100 mm

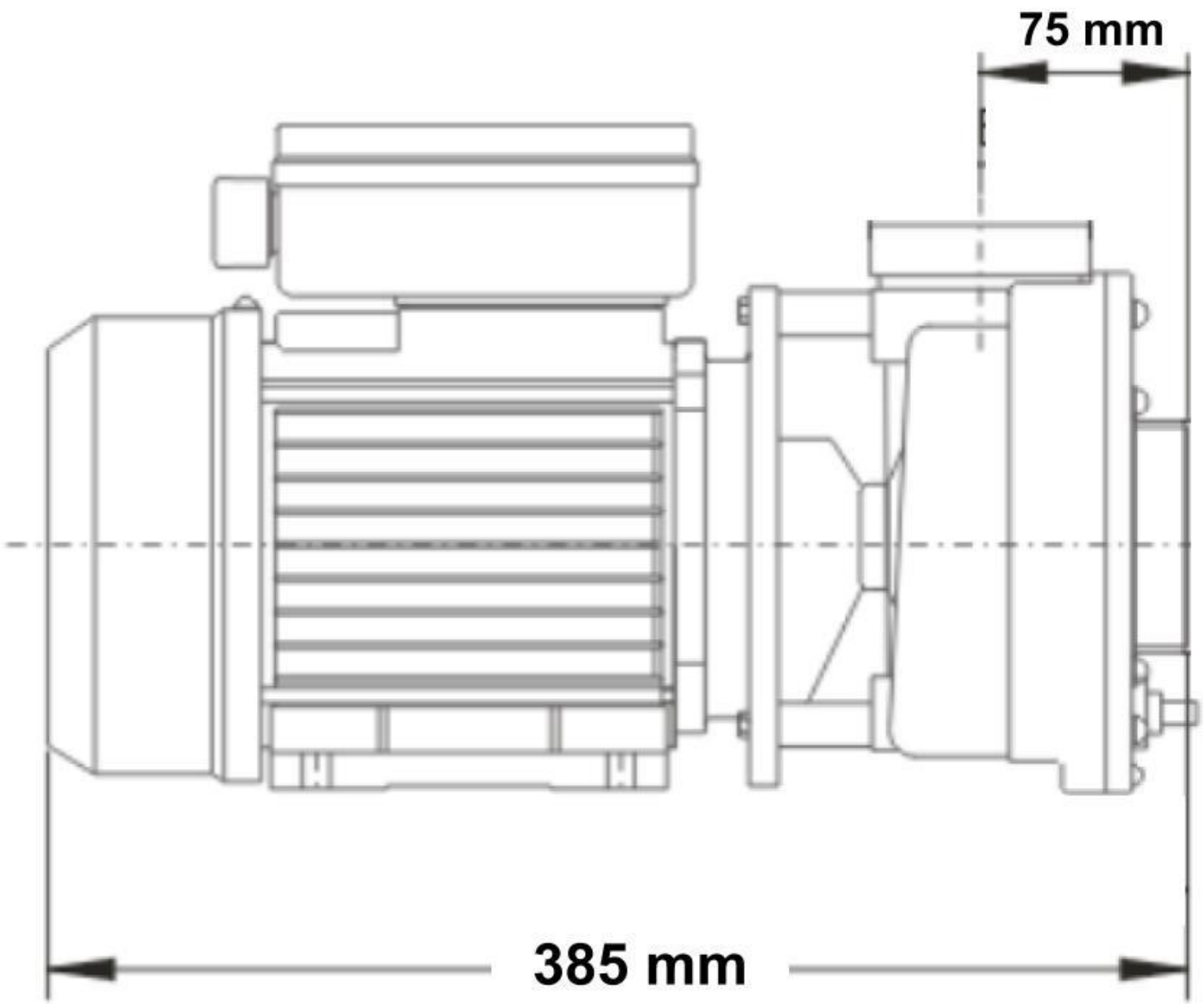
75 mm
385 mm

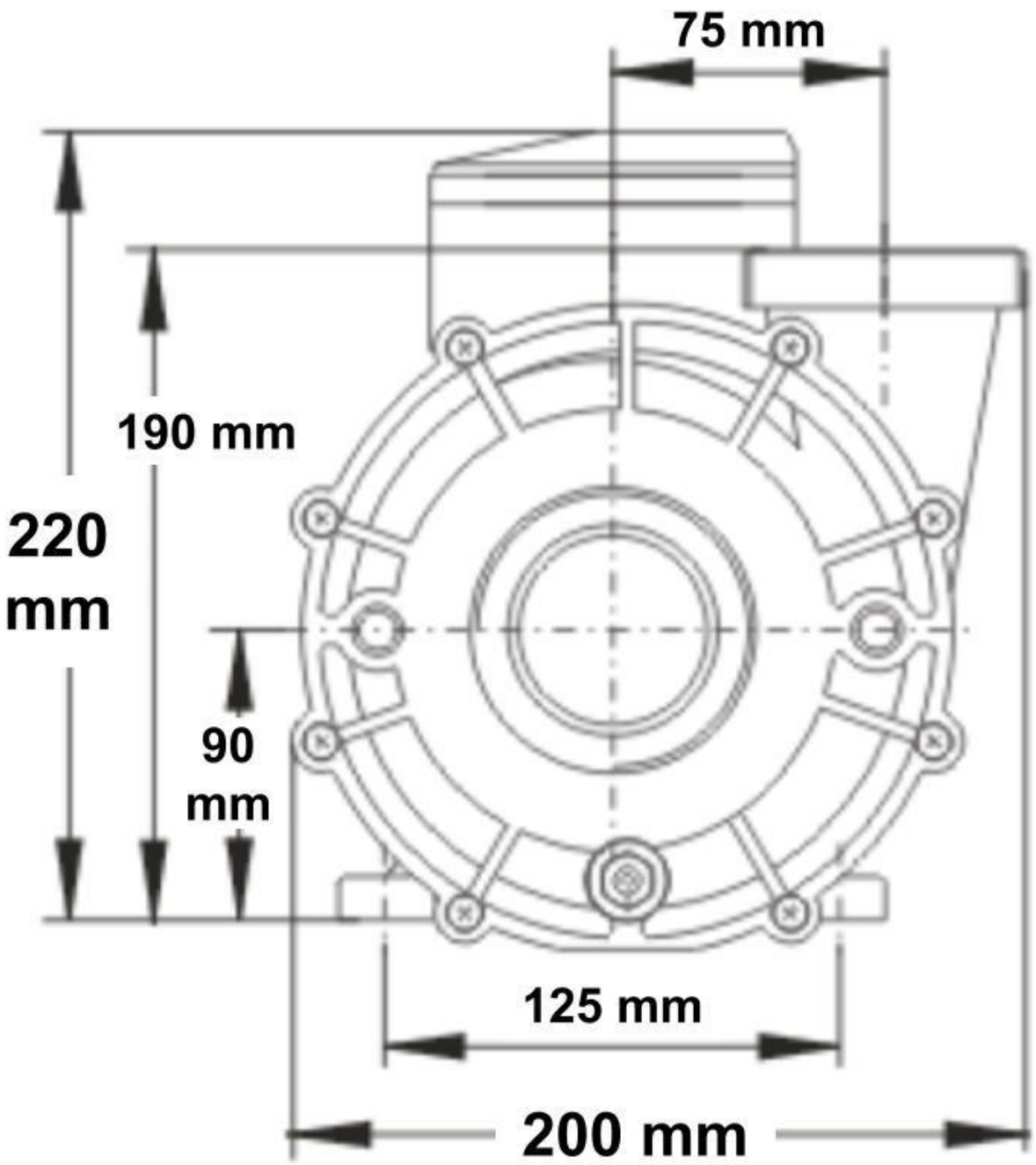
75 mm
190 mm
220
mm
90
mm
125 mm
200 mm